Installation and Troubleshooting Guide

This installation is to be completed by an Authorized Dealer or Professional Service Technician. For questions regarding installation or warranty, call Technical Support at (800) 648-3976. Do not return to the Dealer or Distributor where the part was purchased. Contact Sierra Directly for Return Goods Authorization.

SIERRA P/N: 18-99178

Replaces P/N's: 364708, 581397, 76370, 764708, and 18-5755. (No RPM Limit)
This unit replaces CDI P/N: 113-1397

WARNING! This product is designed to be installed by a professional marine mechanic. Dometic cannot be held liable for injury or damage resulting from improper installation, abuse, neglect, or misuse of this product.

This Power Pack does not have an RPM Limiter built in!

How to test the Engine Stop Circuit (Kill) for DC Voltage:

1. DC voltage present on the kill circuit of the Power Pack due to a faulty key switch, boat harness, or engine harness will severely damage the Power Pack's internal kill circuit**.** Connect a Digital Multi Meter to the Ignition Stop wire AT THE POWER PACK while disconnected from the Power Pack in reference to a known good engine ground. Turn the Ignition switch on and off several times. If, at any time, you see over 2 VDC on the kill wire, there is a problem with one or both harnesses and/or the Ignition switch. The Ignition Stop wire should not be connected back to the new Power Pack at any point until the problem is corrected **OR DAMAGE TO THE POWER PACK WILL OCCUR**!

INSTALLATION

1. Disconnect the Negative battery cable.
2. Remove the old Power Pack cover.
3. Disconnect all wires from the old Power Pack.
4. Remove the old Power Pack and save the mounting bolts.
5. Install the new Power Pack using the original bolts.
6. Reconnect the wires according to the connection guide below (also located on the cover).
7. Install the new cover and gasket using the new screws included with the new Power Pack.
8. Reconnect the Negative battery cable.

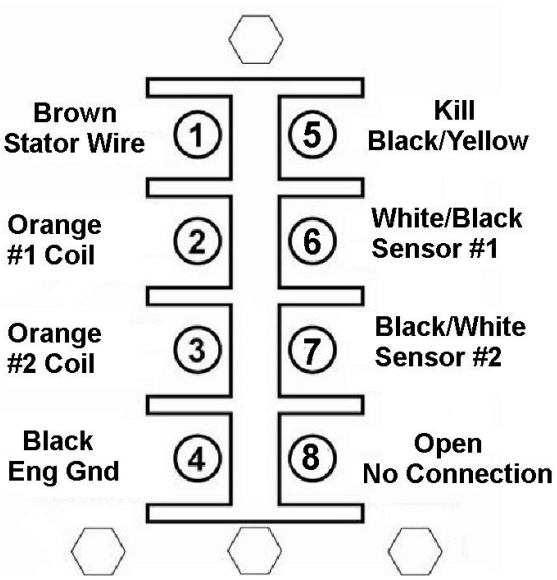

All rights reserved. Reproduction or use of content, in any manner, without express written permission by Dometic, is prohibited.

TROUBLESHOOTING

NO SPARK ON ANY CYLINDER:

1. Disconnect the Black/Yellow stop wire from the Power Pack and retest. If the engine's ignition has spark, the stop circuit has a fault. Check the key switch, harness, and shift switch (if present).
2. Check the cranking RPM. A cranking speed of less than 250 RPM may not allow the system to spark properly. This can be caused by a weak battery, dragging starter, bad battery cables, or a mechanical problem inside the engine.
3. Disconnect the Yellow wires from the Rectifier (if equipped) and retest. If the engine now sparks, replace the Rectifier.
4. Inspect and clean all engine and Ignition ground connections.
5. Check the Triggering and Charge coil flywheel magnets for cracked, broken, or loose magnets.
6. Check Stator and Timer Sensor resistance and DVA:

Read from	Read to	OEM Ohms	SIE Ohms	DVA Connected	DVA Disconnected
Brown (Stator)	Engine Gnd	400-600 Ω	650-850 Ω	150-400 V	150-400 V
Black/White (#1 Sensor)	White/Black (#2 Sensor)	10-20 Ω	16-20 Ω	0.5 V minimum	0.5 V minimum
Black/White (#1 Sensor)	Engine Gnd	Open	Open	150-400 V	-
White/Black (#2 Sensor)	Engine Gnd	Open	Open	150-400 V	-

7. Check the DVA on the Black/Yellow kill wire on the screw terminal of the Power Pack. You should have a reading of at least 150 DVA or more. The Stator and Timer Sensor should be connected to the Power Pack for this test. If you do not, check the DVA on the Stator and Timer Sensor. If the DVA on the Stator and Timer Sensor is good but the DVA on the Black/Yellow Kill wire on the screw terminal of the Power Pack is low, the Power Pack is likely faulty.
8. If the Timer Sensor DVA is low, you may try to reset the air gap between the Timer Sensor and the Triggering magnet. See below for setting the air gap:
   a) Loosen the two mounting screws on the Timer Sensor and the nut located in the epoxy on the outside of the heat shield of the Timer Sensor.
   b) Slide the Sensor in toward the crankshaft 0.005” at a time.
   c) Coat the face of the Sensor with machinists bluing or equivalent.
   d) Install the flywheel according to the service manual and crank the engine over.
   e) If the ignition sparked, tighten the nut hand tight on the outside of the heat shield and coat it with RTV.
   f) If still no spark, slide the Sensor in another 0.005” and repeat steps C through F until the Sensor strikes the Triggering magnet, then back the sensor off 0.005” A continued problem can indicate a bad sensor.

NO SPARK ON ONE CYLINDER:

1. Check the Timer Sensor DVA and resistance (see **NO SPARK ON ANY CYLINDER**).
2. Check the DVA on the Orange wires from the Power Pack while connected to the Ignition coils. You should have a reading of at least 150 V or more. If the reading is low on one cylinder, disconnect the Orange wire from the Ignition coil for that cylinder and reconnect it to a Pack Load resistor. Retest. If the reading is now good, the Ignition coil is likely bad. A continued low reading usually indicates a bad Power Pack.
3. Swap the Orange Primary coil wires on the Power Pack and see if the spark moves from one cylinder to the other one. If it does, the Power Pack is likely bad. If the spark stays on the same cylinder, the Ignition coil is probably bad.
4. Swap the Timer Sensor wires on the Power Pack and see if the spark moves from one cylinder to the other one. If it does, the Timer Sensor is likely bad. If the spark stays on the same cylinder, the Power Pack is likely bad.
5. Visually inspect the Ignition coils for burned or discolored areas or cracks in the casing (indicating arcing inside the coil).
6. Swap the Ignition coil with the one that is sparking correctly.

ENGINE WILL NOT STOP (KILL):

1. Disconnect the Black/Yellow wire at the Power Pack. Connect a jumper wire to the stop wire from the Power Pack and short it to engine ground. If this stops the Power Pack from sparking, the stop circuit has a fault. Check the key switch, harness, and shift switch (if present). If this does not stop the Power Pack from sparking, replace the Power Pack.

MISS AT ANY RPM:

1. Disconnect the Yellow wires from the Stator to the Rectifier and retest. If the miss clears, replace the Rectifier.
2. In the water or on a Dynamometer, check the DVA on the Orange wires from the Power Pack while connected to the Ignition coils. You should have a reading of at least 150 DVA or more, increasing with engine RPM until it reaches 300-400 DVA maximum. A sharp drop in DVA right before the miss becomes apparent on all cylinders will normally be caused by a bad Stator. A sharp drop in DVA on less than all cylinders will normally be the Power Pack or Timer Sensor.

All rights reserved. Reproduction or use of content, in any manner, without express written permission by Dometic, is prohibited.

3. Connect an inductive tachometer to each cylinder in turn and try to isolate the problem. A high variance in RPM on one cylinder usually indicates a problem in the Power Pack or Ignition coil. Occasionally a Timer Sensor will cause this same problem. Check the Timer Sensor DVA (see **NO SPARK ON ANY CYLINDER**).
4. Perform a high-speed shutdown and read the spark plugs. Check for water. A crack in the block can cause a miss at high speed when the water pressure gets high, but a normal shutdown will mask the problem.
5. Check the Trigger and Charge coil flywheel magnets for cracked, broken, or loose magnets.

All rights reserved. Reproduction or use of content, in any manner, without express written permission by Dometic, is prohibited.