XTREME SERIES - SIDE MOUNT CONTROL

APPLICATIONS

Dual-function control - one lever controls throttle and shift. For nearly any engine

FEATURES

- All controls include start in gear protection
- Designed for use with both 3300/33C universal and OEM shift and throttle cables
- Suitable for most single engine boats
- Can be used in dual station boats with the DS unit
- Dual action lever (throttle and shift control on one handle)
- Neutral Interlock standard on all side mount controls
- Trim & Tilt options available
- Included cut off switches (inboard and outboard versions)
- Drag adjustment on all controls
- Easy installation and set up
- Neutral “warm up” button for throttle only operation
- Designed and assembled in the USA

CHX8051P Pictured

The ergonomics and features of our Xtreme controls are advanced beyond those of any other control on the market.

A shapely, balanced handle design provides an incredibly smooth yet positive feel. Neutral interlock, neutral throttle warm-up, start-in-gear protection features are standard on all Xtreme Side mount models, with power trim/tilt, emergency cut off switches offered as an option. In addition, the cosmetics of these controls can be configured to suit many tastes.

Xtreme controls are suitable for use with both 3300/33C universal or OEM type control cables without adaptation.

ORDER INFORMATION

OPTION - BLACK	PART No.
Xtreme Side Mount Control, Black with Trim Switch (no Cut Off Switch)	CHX8554P
OPTION - CHROME	**PART No.**
Xtreme Side Mount Control, Chrome with Engine Cut Off Switch, Trim Switch	CHX8051P
Xtreme Side Mount Control, Chrome with Engine Cut Off Switch, Trim Switch, Tilt Switch	CHX8052P

NOTE:
When properly installed, these engine controls will connect to outboard, stern drive and inboard engines, utilizing Mercury/Mariner® and OMC® OEM type control cables as well as 3300/33C universal type cables and engine connection kits.

Issue Date - Sept 2017
Issue Number - mcda-1 aftermarket

XTREME SERIES - SIDE MOUNT CONTROL

TECHNICAL DATA

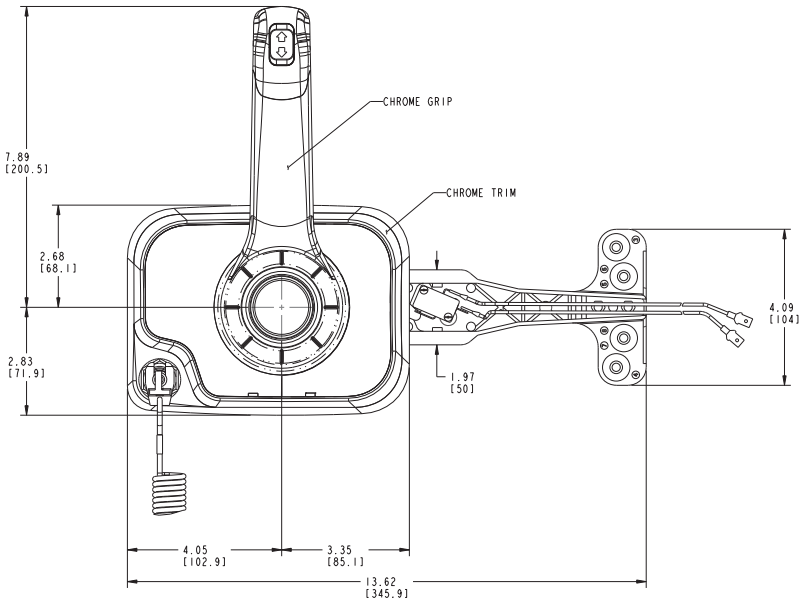

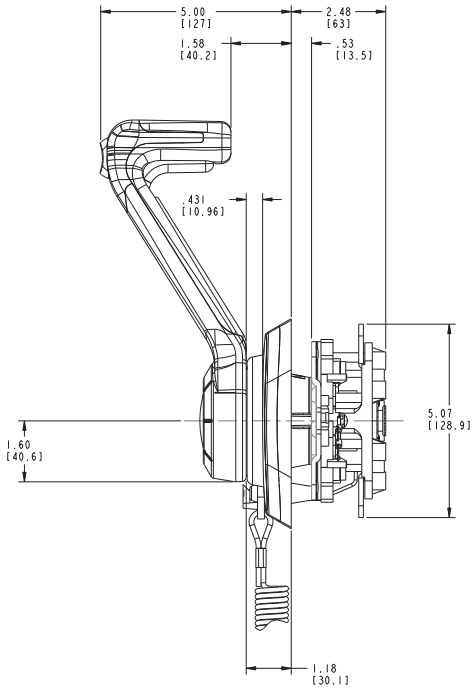

CHX8051P Hole Cutout

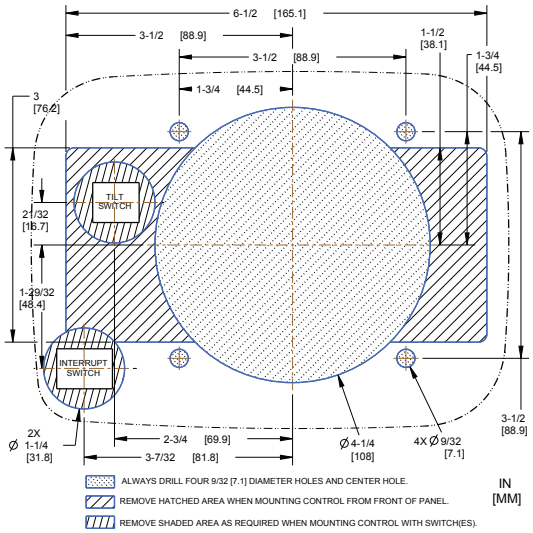

Issue Date - July 2017

Issue Number - mcda-1 aftermarket