Marine Products
Manufactured by:
Teleflex inc. (USA)
6980 Professional Pkwy East
Sarasota, FL 34240-8414
Phone (941) 907-1000
FAX (941) 907-1020

DUAL RANGE ELECTRIC TROLLING/CRUISING SPEEDOMETER

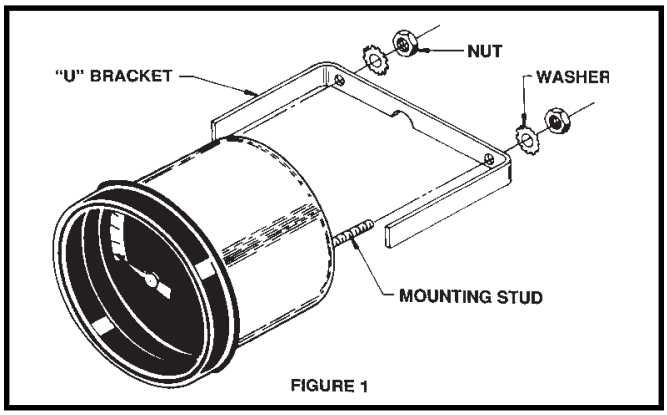

FIGURE 1

The following are Instructions for wiring and installing the 12 VDC Teleflex Electric Dual Range Trolling/Cruising Speedometer Instrument and Sending Unit.
NOTE: THIS DEVICE INDICATES SPEED THROUGH THE WATER. ACTUAL SPEED OVER THE BOTTOM WILL BE AFFECTED BY TIDE OR CURRENT.

CAUTION:
READ THESE INSTRUCTIONS THOROUGHLY BEFORE PROCEEDING WITH INSTALLATION. DO NOT DEVIATE FROM WIRING INSTRUCTIONS. INCORRECT WIRING COULD CAUSE ELECTRICAL SHORT AND POSSIBLE FIRE. ALWAYS DISCONNECT BATTERY BEFORE MAKING ANY ELECTRICAL CONNECTIONS.

PREPARATION FOR INSTALLATION

1. Select a mounting location for gauge which provides easy readability from the Operatorís position. Check behind mounting panel for sufficient installation clearance. Also, select a suitable space within 12" for mounting the Range Selector Switch.
2. To minimize chipping, cover both locations with masking tape. Mark hole locations.
3.Cut a 3.396" +/-.032" (86mm) diameter hole through the panel at the desired speedometer instrument location.
4.Refer to Figure 2. Drill two (2) 13/16" diameter holes and remove excess material (shaded area) with a rasp or keyhole saw. Drill suitable holes for the #6 Switch Plate mounting screws.
5.Insert gauge in mounting hole and check for proper fit.
6.Refer to Figure 1. Fit "U" bracket from hardware package over mounting studs on back of gauge and affix #8 star washers and #8 brass nuts. Trim bracket length as necessary for proper mounting . With the gauge fitted into the dash, tighten washers and nuts on mounting studs until gauge can no longer be rotated by hand.

CAUTION:
OVERTORQUING OF NUTS MAY CRACK GAUGE HOUSING OR MOUNTING PANEL.

7. Mount Range Selector switch in mounting plate. Note position of switch terminals in Figure 2. End of switch body with terminal goes towards "Troll" on mounting plate. Bring wires from Speedometer though switch hole and attach to switch. Either wire can attach to either terminal. Place switch/mounting plate assembly in dash and secure with two screws provided.

INSTALLATION OF SENSOR

The sensor consists of a paddlewheel and electronics integral with the mounting bracket. The kit also includes the appropriate hardware to install the unit on transoms with angles of 13° to 20°. If transom angle is less than 13° or greater than 20°; you will have to fabricate a shim from plastic, metal, or an oily wood such as teak. (See Figures 3A & 3B.)
1. The location of the sensor will depend on the specific installation and your equipment. Locate sensor according to these guidelines:
A) Single engine - mount the sensor on the side of the boat where propellor is rotating downwards, at least 3" beyond the swing radius of the propellor. (See Figure 4.)
B) Twin engines - mount the sensor between the drives.
2. Do not locate the sensor behind any planing strake, ribs, struts or other protrusions which may disturb water flow to the paddlewheel.If transom is stepped, mount the sensor on the step.
3. Hold the sensor (and shim if required) in the desired location, with its bottom paralllel to the hull's bottom. Mark the outline of the slots in the sensor on the transom in the desired location. In the center of the slots, drill two holes 7/8" deep, using a #23 or 9/64" bit.
4. Position the sensor (with shim if required) and install by applying underwater grade caulking to the screw threads and tighten the sensor lightly to the hull. Adjust the sensor so it is flush with the bottom of the hull and tighten the screws.
5.Fill any gap between the sensor and the hull with marine sealant using a putty knife for smoothing. This will ensure smooth water flowing over the paddlewheel (see Figures 3 A and 3B).

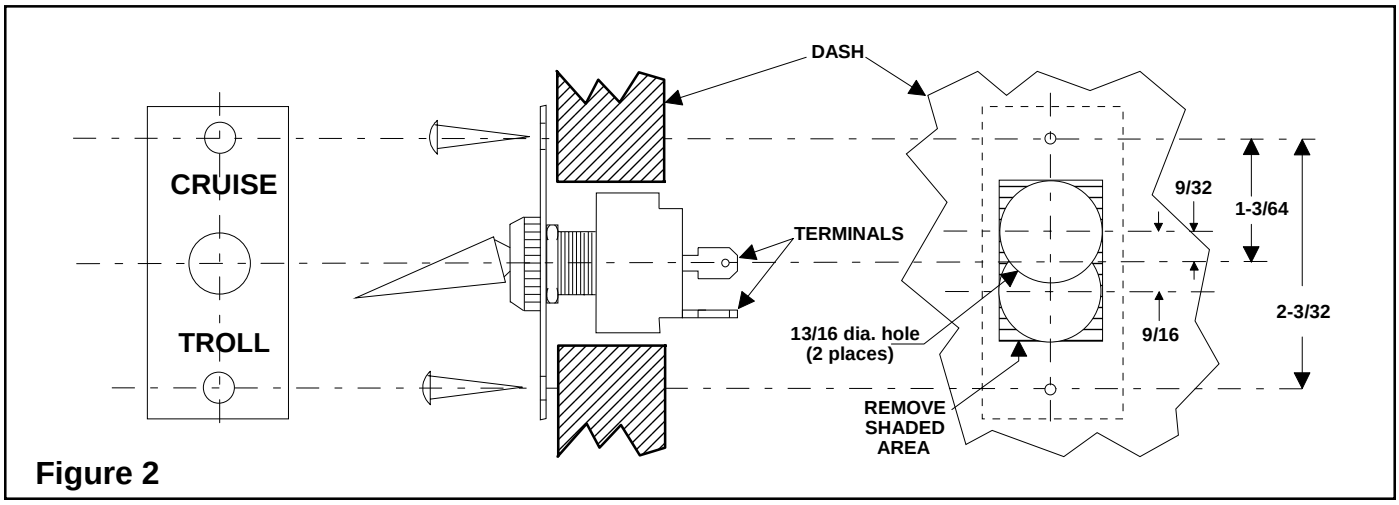

Figure 2

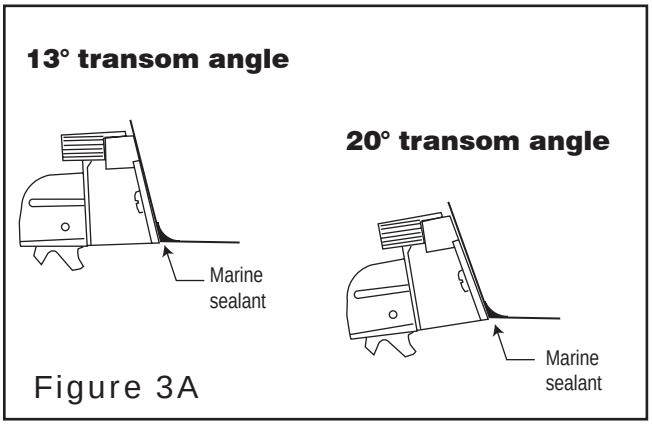

Figure 3A

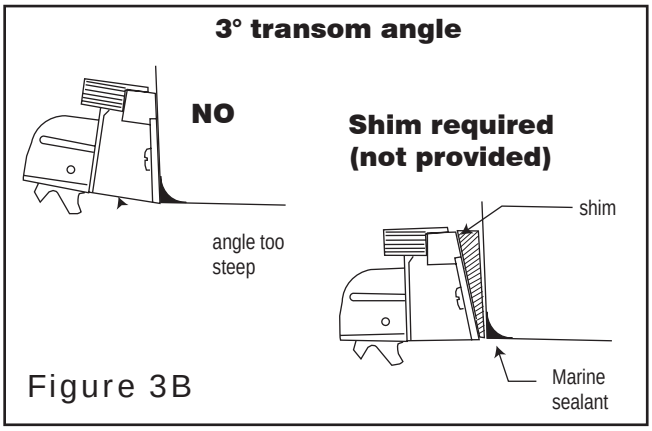

Figure 3B

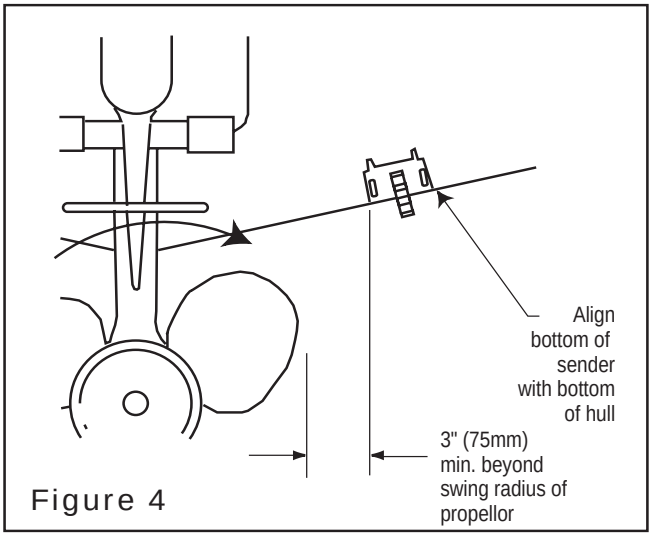

Figure 4

Cable Routing

Route the sensor cable over the transom, through a drain hole or through a new hole drilled in the transom **above** the waterline.

Caution: Never cut the cable.

1. If a hole must be drilled, choose a location well above the waterline. Check for obstructions such as trim tabs, pumps or wiring inside the hull. Mark the location with a pencil. Drill a hole through the transom using a 19 mm (3/4") hole saw or spade bit (to accommodate the connector).
2. Route the cable over or through the transom.
3. On the outside of the hull secure the cable to the transom using the cable clamps. Position a cable clamp 50mm (2") above the bracket and mark the mounting hole with a pencil .
4. Position the second cable clamp halfway between the first clamp and the cable hole. Mark this mounting hole.
5. If a hole has been drilled through the transom, open the appropriate slot in the cable cover. Position the cover over the cable where it enters the hull. Mark the two mounting holes.
6. At each of the four marked locations, use a 3mm or 1/8" bit to drill a hole 10mm (3/8") deep. [To avoid drilling too deeply, wrap masking tape around the bit 10mm (3/8") from the point.]
7. Apply marine sealant to the threads of the four #6 x 1/2" self-tapping screws to prevent water from seeping into the transom. If you have drilled a hole in the transom, apply marine sealant to the space around the cable leading through the transom.
8. Position the cable clamps and screw them in place. If used, push the cable cover over the cable and screw it in place.

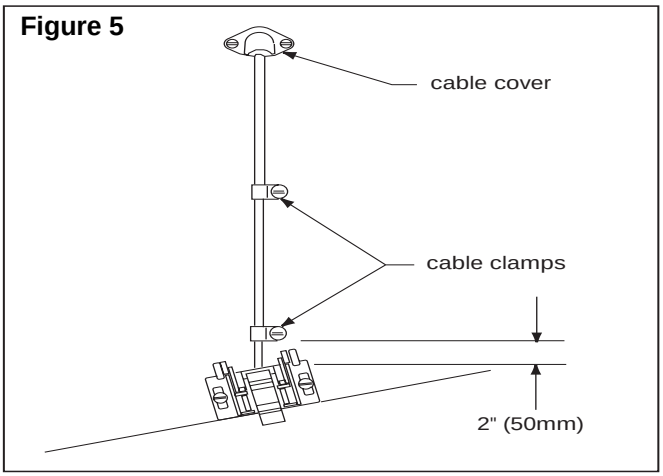

9. Route the cable to the instrument through the interior of the boat. Be careful not to tear the cable jacket when passing it through the bulkhead(s) and other parts of the boat. To reduce electrical interference or ìnoiseî, separate the sensor cable from other electrical wiring. Coil any excess cable and secure it in place with zip-ties to prevent damage.

FINAL WIRING OF SPEEDOMETER
MAKE SURE THAT ALL ELECTRICAL WIRING IS DRESSED AWAY FROM MOVING OR HOT ENGINE COMPONENTS.

1. Install ring terminals on ends of sensor cable wires. See Figure 5. Using washers and nuts supplied, connect wires from sensor cable to instrument as follows:
   a) Blue wire from cable to IGN terminal.
   b) Bare wire from cable to GND terminal.
   c) Black wire from cable to SEND terminal
2. Run a lead from the 'GND' (ground) terminal on the gauge to the electrical system ground.
3. Run a lead from the 'LT' (light) terminal on the gauge to the panel light switch or the 'L' terminal of another gauge
4. Run a lead from the 'IGN' (Ignition) terminal on the Gauge to the 'I' terminal on the rear of the ignition switch. Alternatively you may connect this terminal to the 'IGN' terminal on another gauge.

CAUTION

BEFORE RECONNECTING BATTERY TO ELECTRICAL SYSTEM, RECHECK ALL WIRING TO ENSURE ALL CONNECTIONS ARE PROPERLY MADE. INCORRECT CONNECTIONS OR ELECTRICAL SHORTS COULD CAUSE DAMAGE OR FIRE IN SYSTEM. ELEMENTS OF ELECTRICAL SYSTEMS SHOULD HAVE PROPER FUSES INSTALLED.

When wiring is complete, connect power and calibrate instrument as described in the calibration section of this Instruction Sheet.

KEEP THESE INSTRUCTIONS FOR FUTURE REFERENCE FOR CALIBRATION AND SERVICE

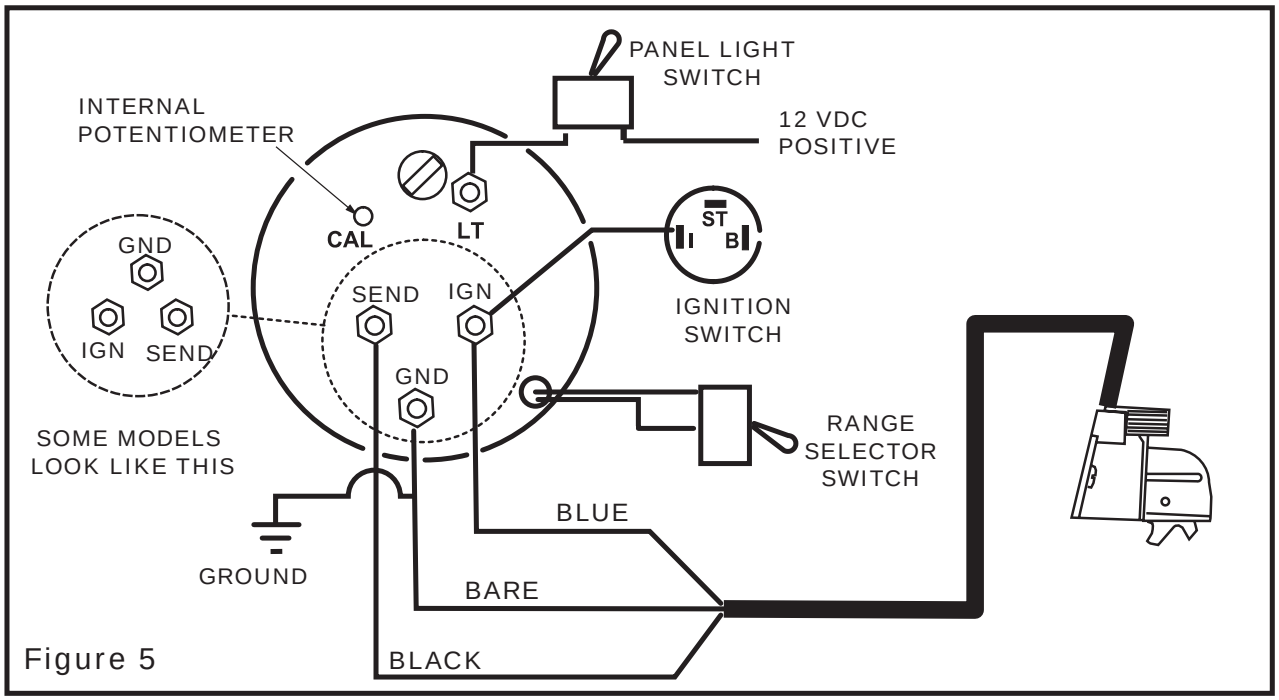

Figure 5

FIELD CALIBRATING THE INSTRUMENT

The Speedometer is factory calibrated. Variations in installation and hull shape may require finer adjustment. Incorrect wedging of the sender bracket will affect readings. The Internal Potentiometer provides adjustment from the factory calibration.

CALIBRATION

Calibrate the instrument in calm water, not in river current nor in tide-changing conditions. You will need a stop watch and a measured mile marked on shore. A Water-ski Slalom course, or known distance between two buoys, may also be used. Your boat will also need to be equipped with an accurate tachometer.

1. By inserting the screwdriver through the Calibration opening in the rear of the instrumentís case, it is possible to adjust the Internal Potentiometer.

CAUTION: DO NOT FORCE ADJUSTMENT OR YOU WILL PERMANENTLY DAMAGE THE SPEEDOMETER.

A. USING A MEASURED MILE COURSE

2. Bring boat to a given speed by monitoring RPM. Start through the measured mile at constant speed, preferably 3500 RPM. Continue at constant speed through measured mile and monitor both time and RPM.
3. Rerun measured mile at same RPM to double check accuracy. Be sure boat has achieved constant RPM and speed before starting measured mile, and keep boat at speed as measured mile is completed.
4. Determine Speed at RPM by dividing the time required to complete the distance; by the distance. The result is your miles-per-hour speed. The graph shown at the end of these instructions can be used as an aid in determining speed. Place a straightedge at the point at the bottom of the chart and align the straightedge so it intersects the time at which you covered one mile. The straightedge will intersect the correct speed shown in the top line.
5. Rerun measured mile at 3500 RPM and adjust speedometer to speed calculated in step 4. Turn the Potentiometer clockwise to increase the reading, counterclockwise to reduce it.
6. If adjustment will not bring reading to calculated speed, verify that paddlewheel sending unit is properly located, and wedged correctly.

B. USING A SLALOM COURSE

2. If you have access to a Water-ski Slalom course, run through the course at a set speed of 36 MPH. Refer to the chart (Figure 6) below. If your time is higher than 16.28 seconds, you must rerun the course, adjusting your boat speed faster until you meet the tolerance of 15.88-16.28 seconds.
3. Once you meet this time tolerance, maintain your boat speed and adjust the Internal Potentiometer so your gauge reads 36 MPH. Turning the Potentiometer clockwise will increase the reading.
4. If your time is 15.88 seconds or less, slow the boat down until you meet the time tolerance, and adjust the speedometer to read 36 MPH. Turning the potentiometer counterclockwise will reduce the reading.
5. It should not take more than a few runs to get the Electric Speed-ometer into the tolerance spread shown in the chart. If adjustment will not bring the reading to calculated speed, verify that the paddlewheel sending unit is properly located and shimmed correctly.

SLALOM COURSE

SPEED MPH	SPEED KPH	TIME SECONDS	TOLERANCE
22	36	26.33	25.75 - 26.95
24	39	24.14	23.65 - 24.65
26	42	22.28	21.86 - 22.72
28	45	20.69	20.33 - 21.07
30	48	19.31	19.00 - 19.64
32	51	18.11	17.83 - 18.39
34	55	16.95	16.65 - 17.25
36	58	16.08	15.88 - 16.28

Reprinted from AWSA official Tournament Rules.

TRAILERING

If trailering for long distances, either prevent paddlewheel from rotating bysecuring with a rubber band, or enclose paddlewheel in a plastic bag to prevent rotation and abrasive damage from dust/dirt.

TROUBLESHOOTING

If speed seems incorrect::

a) The Speedometer is factory calibrated, but incorrect shimming of the Sensor will affect readings. Check Sensor installation.
b) The paddlewheel bracket will "kick up" if an obstruction is hit. Make sure paddlewheel bracket is in full "down" position.

If pointer will not move:

a) Check wiring/power to instrument.
b) Make sure paddlewheel rotates freely.

Pointer "bounces" at very slow speed:

a) Some bounce at 1 mph or less is normal, and should disapear above 1 mph.

Maintenance, Repair and Replacement

Cleaning

Clean the sensor with a soft cloth and mild household detergent. If the paddlewheel becomes fouled or inoperable, unsnap the paddlewheel assembly for cleaning. Severe cases may require removal of the paddlewheel. Using a small screwdriver, remove the paddlewheel shaft retainers (see Figures 7 and 8). (If a retainer is lost, a dab of RTV calk on the end of the shaft will secure it.)

If necessary, use a stiff brush or putty knife to remove the growth. Wet sanding is permissible with fine grade wet/dry paper. (If there is a transducer, be careful to avoid scratching the face.)

Antifouling Paint

Surfaces exposed to salt water that do not interlock, *must be* coated with antifouling paint. Use **water-based** antifouling paint only. *Never* use ketone based paint since ketones can attack many types of plastic. Apply paint every 6 months or at the beginning of each boating season.

Replacement Parts

Complete replacement sensor with cable is Teleflex P/N 55907P, available through Marine Dealers.

Replace broken or worn parts immediately. The water-lubricated paddlewheel bearings have a life of up to 5 years on low-speed boats [less than 10kn (11 MPH)] and 2 years on high-speed vessels.

The shear pins on the paddlewheel assembly are designed to break if excessive force is applied to the speed sensor.

For a replacement snap-in paddlewheel assembly **without** a cable (the cable is mounted in the bracket) order part number 33-105 from:

Gem Electronics Company
110 South Acline Ave.
Lake City, SC 29560
(843) 394-3565

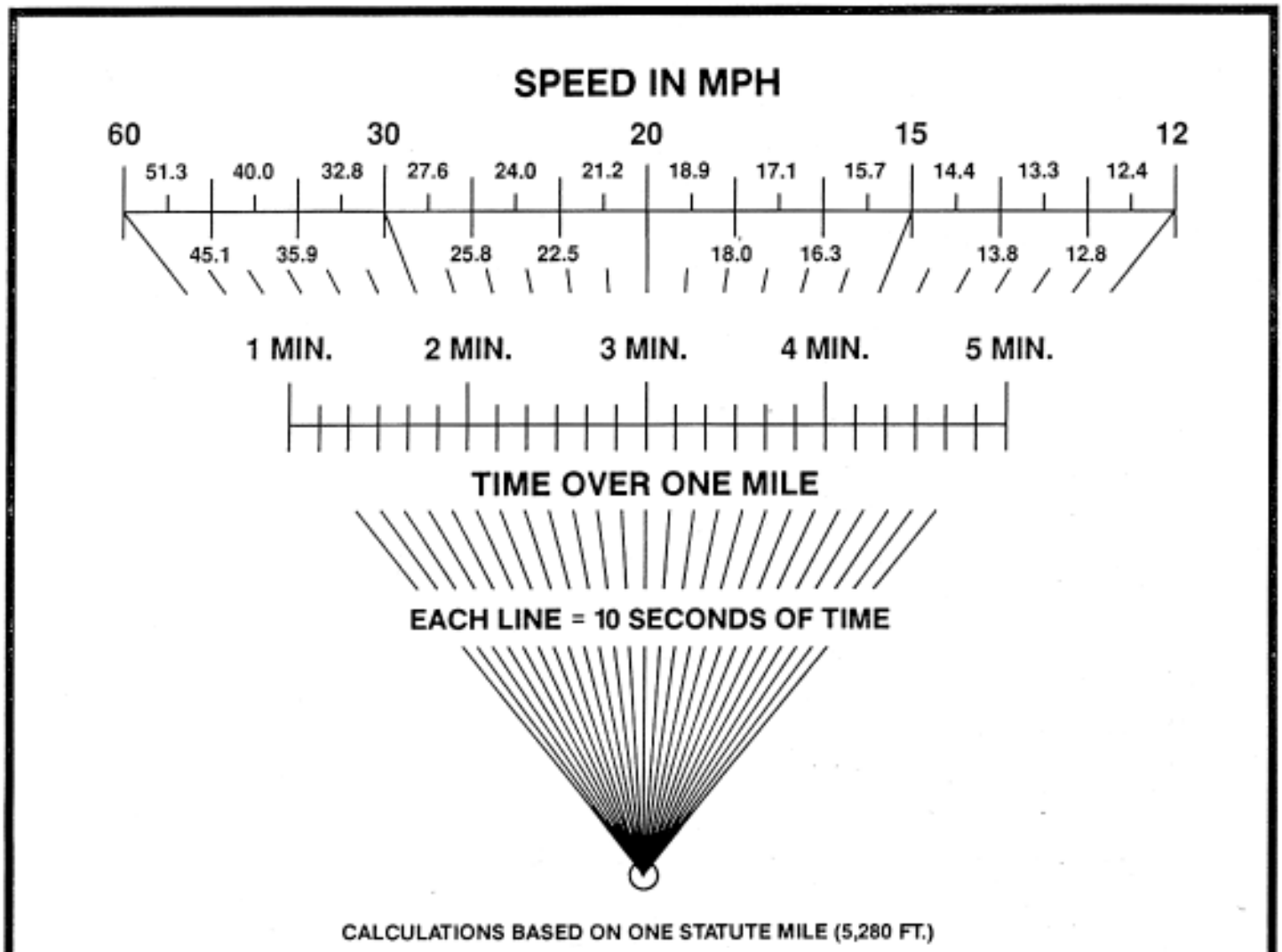

Figure 6

This calibration measures the speed of the boat through the water and does not account for the impact of water conditions on speed. Currents and changing tide conditions will alter actual boat speed. Manufacturer accepts no liability for speed accuracy, as actual speed is affected by outside conditions.