SEASTAR JACKPLATE

SEASTAR HD JACKPLATES

APPLICATIONS

The SeaStar HD Jackplate is rated for 350 horsepower engines that weigh up to 785 lbs.

FEATURES

- HD Jackplate is using high strength materials and is easily capable of handling 350 horse power with engines that weigh up to 785 lbs.
- Rapid hydraulic response in 8.5 seconds.
- Complete rigid engine support at full thrust.
- Easily moves engine at full thrust.
- Comes in 4” (JP4040HD) and 6” (JP4060HD) setbacks.

NOTES:

* *Accessory adapter port and starboard (DK4500P and DK4500S) are required for installation of anchoring systems on JP4060HD.*

** *Cannot mount Power Pole® or Talon® anchoring systems.*

*** *Included with Jackplate harness.*

The SeaStar HD Jackplates utilize high strength materials to be able to handle some of the strongest engines on the water. The heavy duty frames are capable of handling 350 HP engines weighing up to 785 lbs. Designed with speed and durability in mind the HD Jackplate can adjust the engine height in just 8.5 seconds, even while the boat is moving at full power.

ORDER INFORMATION

HYDRAULIC HD PLATES	PART No.
4” Setback Heavy Duty	JP4040HD**
6” Setback Heavy Duty	JP4060HD*

ACCESSORIES	PART No.
Basic Rocker Switch	DK4020***
Pro Trim Single Function	PT1000-1P
Pro Trim Dual Function	PT2000-1P
SmartStick and Gauge Kit	DK4220
Gauge and Harness Kit	DK4320
Accessory Adapter, Port	DK4500P*
Accessory Adapter, Starboard	DK4500S*

Issue Date - July 2015
Issue Number - jp1

SEASTAR JACKPLATE

SEASTAR HD JACKPLATES

FEATURES

- JP4060HD compatible with Power Pole® and Talon®.
- High output integrated actuator to lift and lower engines in all conditions.
- Environmentally sealed non-contact SmartStick position sensor kit available for precise height information.
- Designed to maximize engine tilt with SeaStar steering cylinders.
- High visibility lift scale for quick glance operation.
- Integrated circuit breaker gives electrical protection right at the battery post.
- All hydraulic Jackplates come with basic rocker switch DK4020.

TECHNICAL DATA

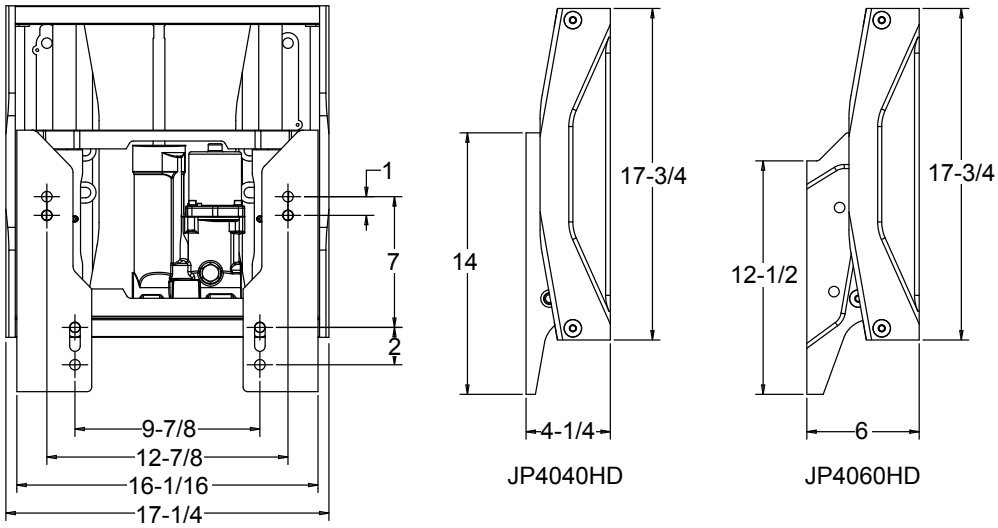

Issue Date - July 2015
Issue Number - jp1