SEASTAR JACKPLATE

SEASTAR MANUAL JACKPLATES

FEATURES

- The interlocking slide guides offer enhanced strength while providing smooth, bind-free travel.
- The lead screw assembly sets the plate height and the Side Locks are used to hold the position.
- The stainless steel lead screw is resistant to corrosion and pre-greased for smooth operation.
- The maximum supported engine weight of 585 lbs is capable of handling the most demanding outboard engines including the latest generation of 4-strokes.

The JP1000 Series Jackplate comes in 4”, 6”, 8”, and 10” setbacks to help you find the best match for your boat and optimize performance.

ORDER INFORMATION

MANUAL JACKPLATES	PART No.
4” Setback with Side Locks	JP1040SS
6” Setback with Side Locks	JP1060SS
8” Setback with Side Locks	JP1080SS
10” Setback with Side Locks	JP1100SS

TECHNICAL DATA

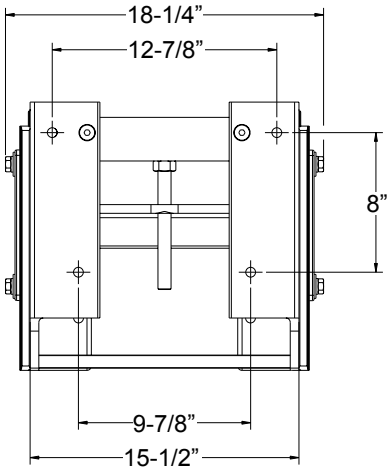

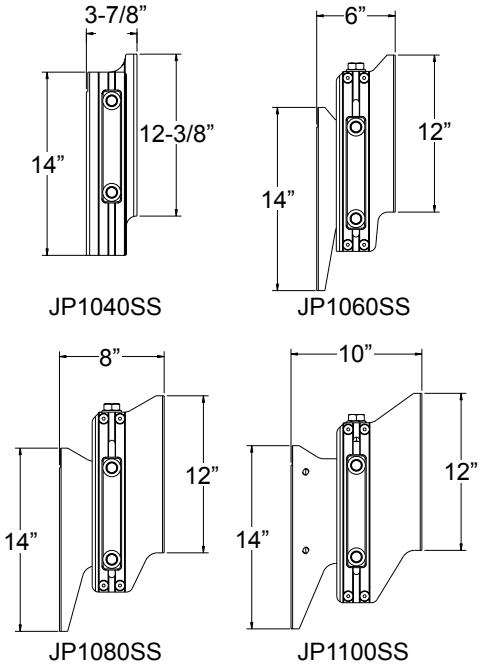

Issue Date - Jan 2015
Issue Number - jp3

SEASTAR SOLUTIONS®

Learn More

www.seastarsolutions.com

GENUINE SEASTAR SOLUTIONS A WORLD LEADER IN MARINE PRODUCTS