CAUTION

After installing your Mallory Electronic Distributor, the Electronic Shift Assist (ESA) circuit in your boat *must* be function tested.

Shifting into or out of gear can be difficult or impossible if the ESA circuit is malfunctioning or missing.

If you encounter shifter related problems with your boat after installing any Mallory distributor, contact the Mallory Technical Service Department at 216.688.8300.

FORM 1219M (REV. C) 10/03

CAUTION

After installing your Mallory Electronic Distributor, the Electronic Shift Assist (ESA) circuit in your boat *must* be function tested.

Shifting into or out of gear can be difficult or impossible if the ESA circuit is malfunctioning or missing.

If you encounter shifter related problems with your boat after installing any Mallory distributor, contact the Mallory Technical Service Department at 216.688.8300.

FORM 1219M (REV. C) 10/03

CAUTION

After installing your Mallory Electronic Distributor, the Electronic Shift Assist (ESA) circuit in your boat *must* be function tested.

Shifting into or out of gear can be difficult or impossible if the ESA circuit is malfunctioning or missing.

If you encounter shifter related problems with your boat after installing any Mallory distributor, contact the Mallory Technical Service Department at 216.688.8300.

FORM 1219M (REV. C) 10/03

CAUTION

After installing your Mallory Electronic Distributor, the Electronic Shift Assist (ESA) circuit in your boat *must* be function tested.

Shifting into or out of gear can be difficult or impossible if the ESA circuit is malfunctioning or missing.

If you encounter shifter related problems with your boat after installing any Mallory distributor, contact the Mallory Technical Service Department at 216.688.8300.

FORM 1219M (REV. C) 10/03

ALL MALLORY MARINE ELECTRONIC IGNITION SYSTEMS IN OUTBOARD MARINE CORP. (OMC) APPLICATIONS WITH A SHIFT BOX REQUIRES THE GRAY WIRE FROM THE COIL TO THE SHIFT BOX TO BE MODIFIED AS FOLLOWS:

The gray wire from the coil (–) terminal triggers the shift box. The gray wire should be cut or disconnected at the coil terminal so that the components shown here can be inserted. Solder all connections and confirm correct operation, then insulate well, especially if the boat is being used in salt water.

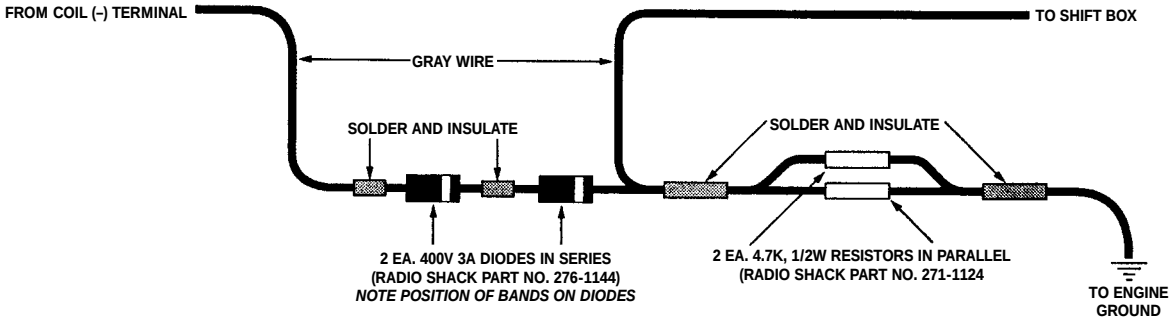

ALL MALLORY MARINE ELECTRONIC IGNITION SYSTEMS IN OUTBOARD MARINE CORP. (OMC) APPLICATIONS WITH A SHIFT BOX REQUIRES THE GRAY WIRE FROM THE COIL TO THE SHIFT BOX TO BE MODIFIED AS FOLLOWS:

The gray wire from the coil (–) terminal triggers the shift box. The gray wire should be cut or disconnected at the coil terminal so that the components shown here can be inserted. Solder all connections and confirm correct operation, then insulate well, especially if the boat is being used in salt water.

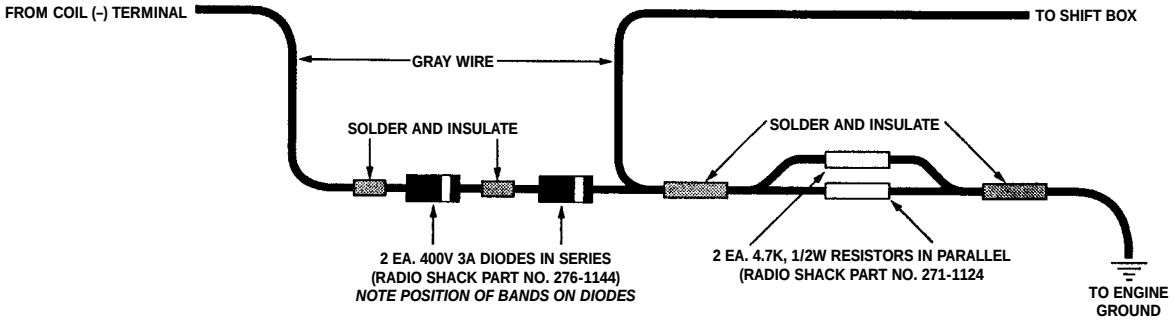

ALL MALLORY MARINE ELECTRONIC IGNITION SYSTEMS IN OUTBOARD MARINE CORP. (OMC) APPLICATIONS WITH A SHIFT BOX REQUIRES THE GRAY WIRE FROM THE COIL TO THE SHIFT BOX TO BE MODIFIED AS FOLLOWS:

The gray wire from the coil (–) terminal triggers the shift box. The gray wire should be cut or disconnected at the coil terminal so that the components shown here can be inserted. Solder all connections and confirm correct operation, then insulate well, especially if the boat is being used in salt water.

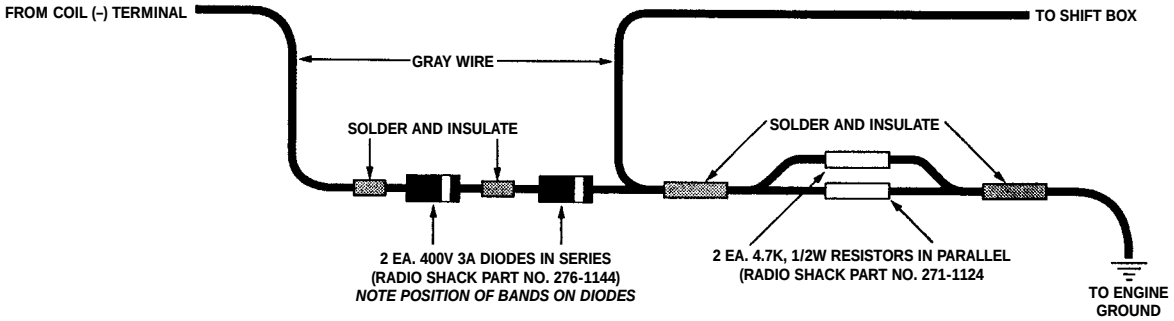

ALL MALLORY MARINE ELECTRONIC IGNITION SYSTEMS IN OUTBOARD MARINE CORP. (OMC) APPLICATIONS WITH A SHIFT BOX REQUIRES THE GRAY WIRE FROM THE COIL TO THE SHIFT BOX TO BE MODIFIED AS FOLLOWS:
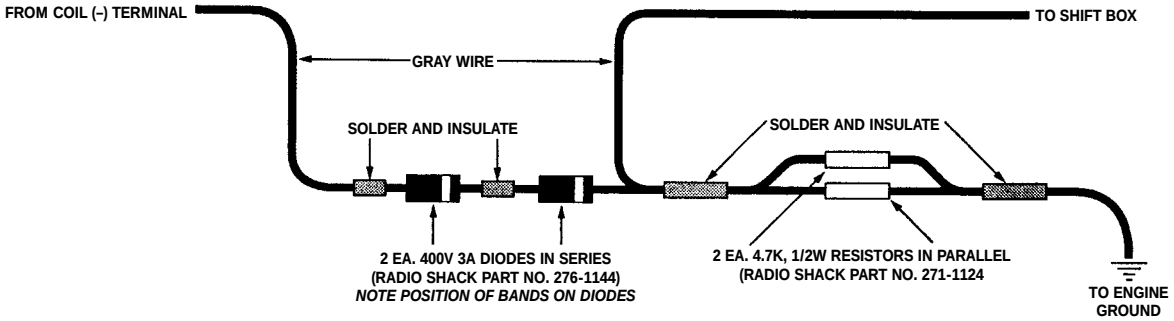
The gray wire from the coil (–) terminal triggers the shift box. The gray wire should be cut or disconnected at the coil terminal so that the components shown here can be inserted. Solder all connections and confirm correct operation, then insulate well, especially if the boat is being used in salt water.